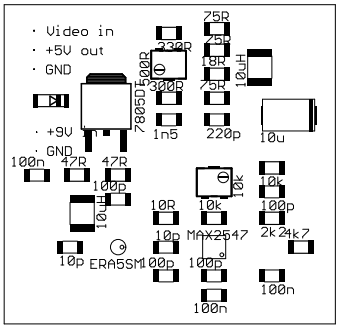
· Video in
· +5V out
· GND
· +9V
· GND
7805D
500R
300p
230R
75R
75R
18R
75R
10uH
1n5
220p
10u
100n
47R
47R
100p
10uH
10R
10k
10k
10k
100p
2k2
4k7
10p
ERA5SM
10p
100p
MAX2547
100p
100n
100n